DRG. No. 523

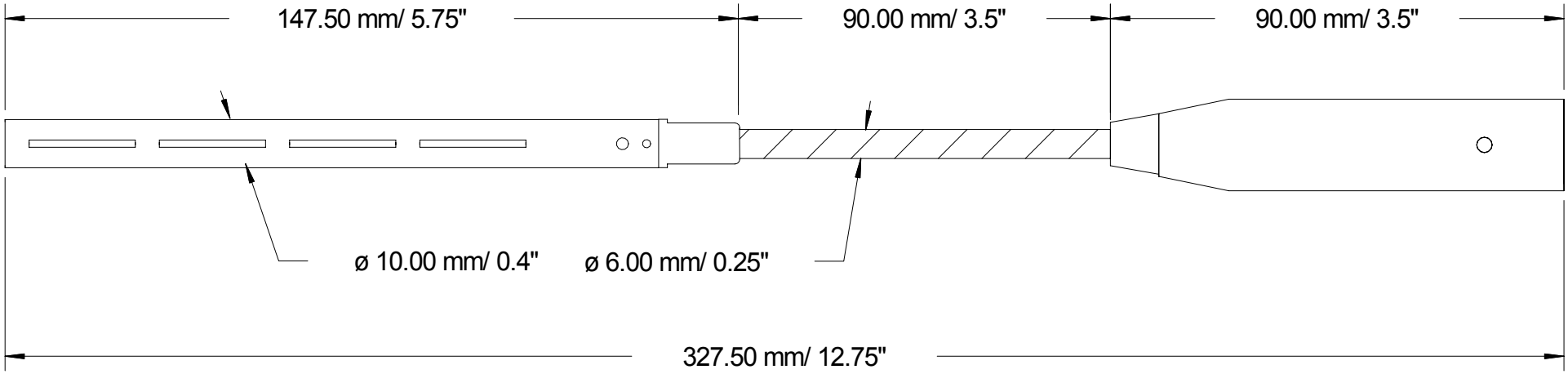

Wiring Configuration For XLR Termination

PIN 1---------Screen

PIN 2---------Phase +

PIN 3---------Phase -

ISSUE	DESCRIPTION	APP'D	DATE		TITLE	DRAWN	TRACED	CHECKED	APPROVED	DATE
	Slimline Hypercardioid Microphone			CLOCKAUDIO	C 815E-RF	C B				07/09/07
	RF Friendly					DRAWING No. 523				