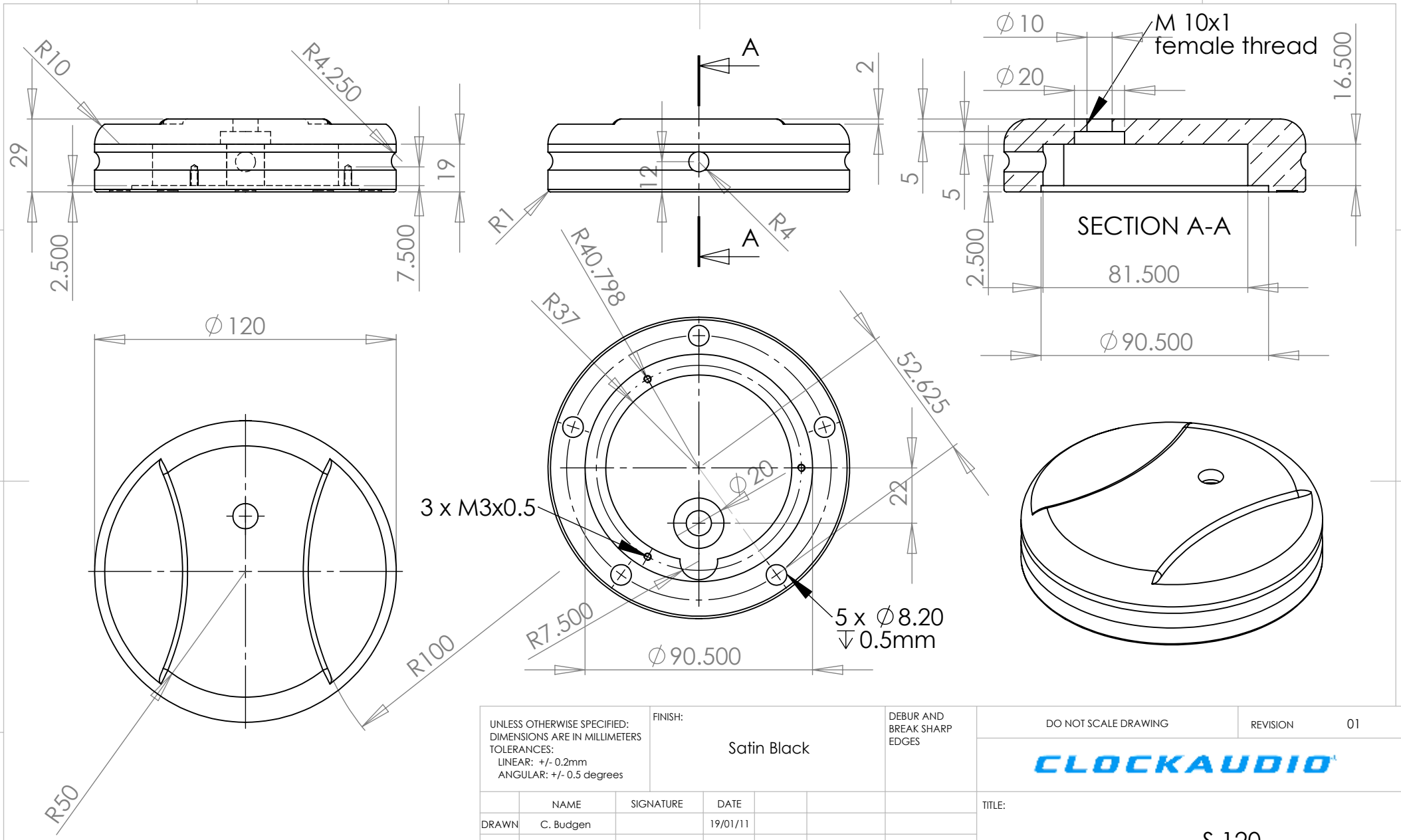

UNLESS OTHERWISE SPECIFIED: DIMENSIONS ARE IN MILLIMETERS TOLERANCES: LINEAR: +/- 0.2mm ANGULAR: +/- 0.5 degrees	FINISH: Satin Black			DEBUR AND BREAK SHARP EDGES	DO NOT SCALE DRAWING	REVISION 01
					CLOCKAUDIO	
	NAME	SIGNATURE	DATE		TITLE: S 120	
DRAWN	C. Budgen		19/01/11			
CHK'D	J. Hallington					
APPV'D	J. Hallington					
MFG	Goble					
Q.A				MATERIAL: EN1A	DWG NO. 796	A4
				WEIGHT:	SCALE:1:2	SHEET 1 OF 1