DRG. No. 582

Wiring Configuration For XLR Termination

PIN 1---------Screen

PIN 2---------Phase +

PIN 3---------Phase -

In-line PPA

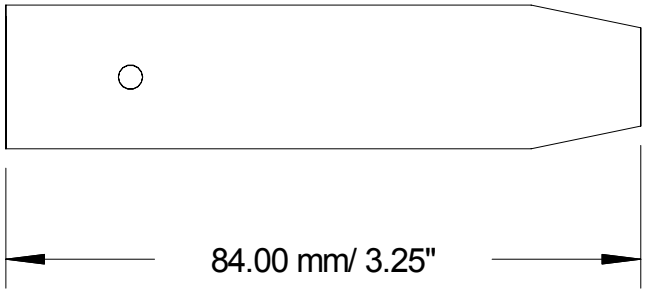

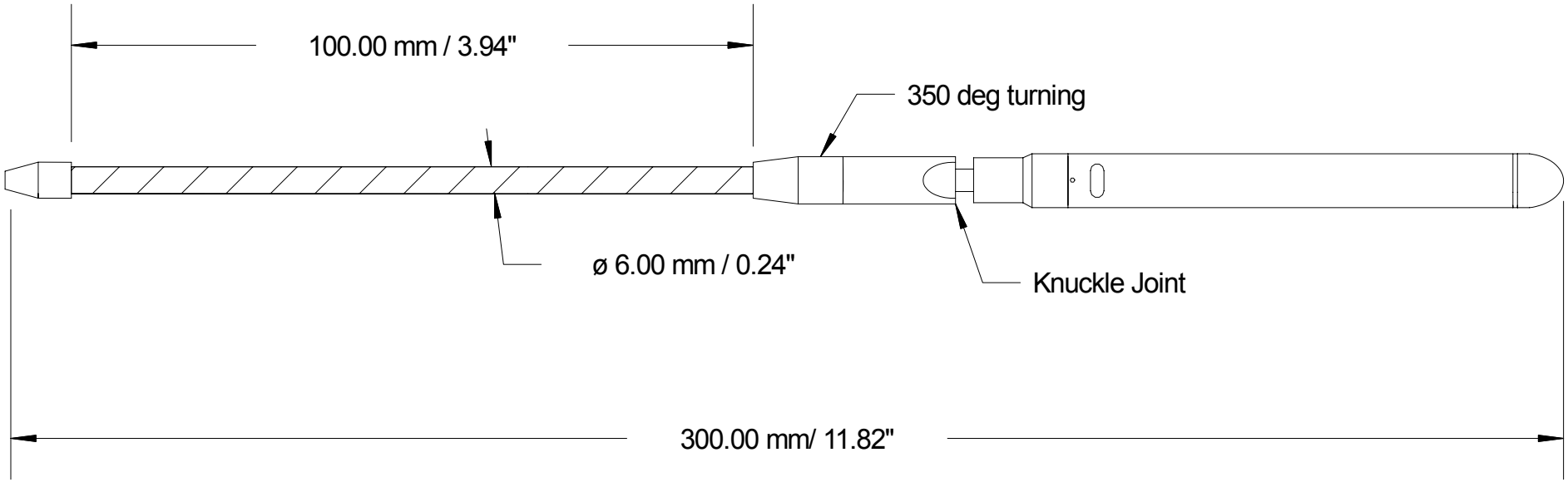

ISSUE	DESCRIPTION	APP'D	DATE		TITLE	DRAWN	TRACED	CHECKED	APPROVED	DATE
1	Hypercardioid Condensor Microphones			CLOCKAUDIO	C 8SE-RF	C B				17/10/08
	Suspended version					DRAWING No. 582				
	RF Friendly									