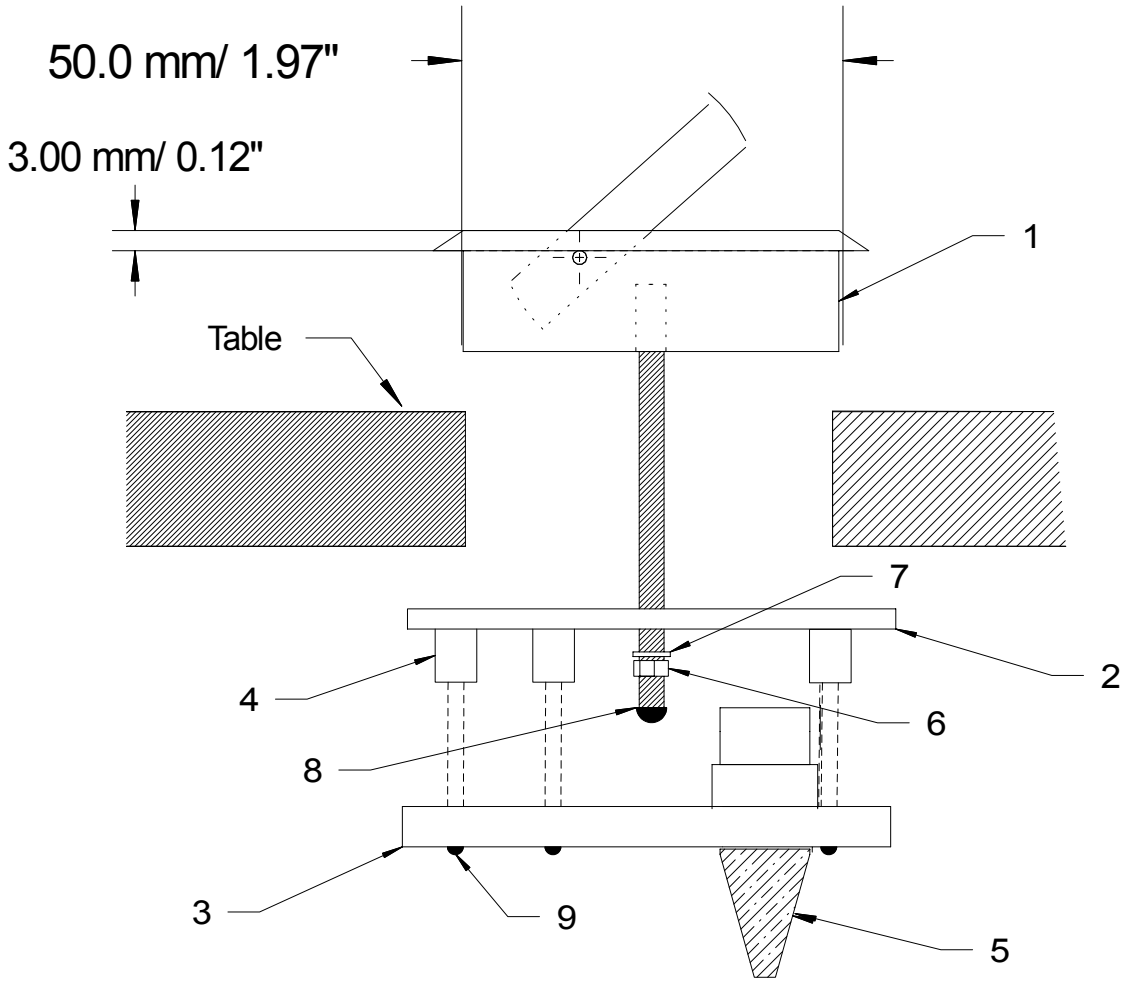

Number	Description
1	Top plate with flap
2	Base plate upper
3	Base plate lower
4	Rubber shock mounts
5	XLR
6	Nut
7	Shakeproof Washer
8	Bolt
9	Pan head screws

DRG. No.

ISSUE	DESCRIPTION	APP'D	DATE

CLOCKAUDIO

TITLE: SM 80

DRAWN	TRACED	CHECKED	APPROVED	DATE
C B				

DRAWING No.