DRG. No. 542

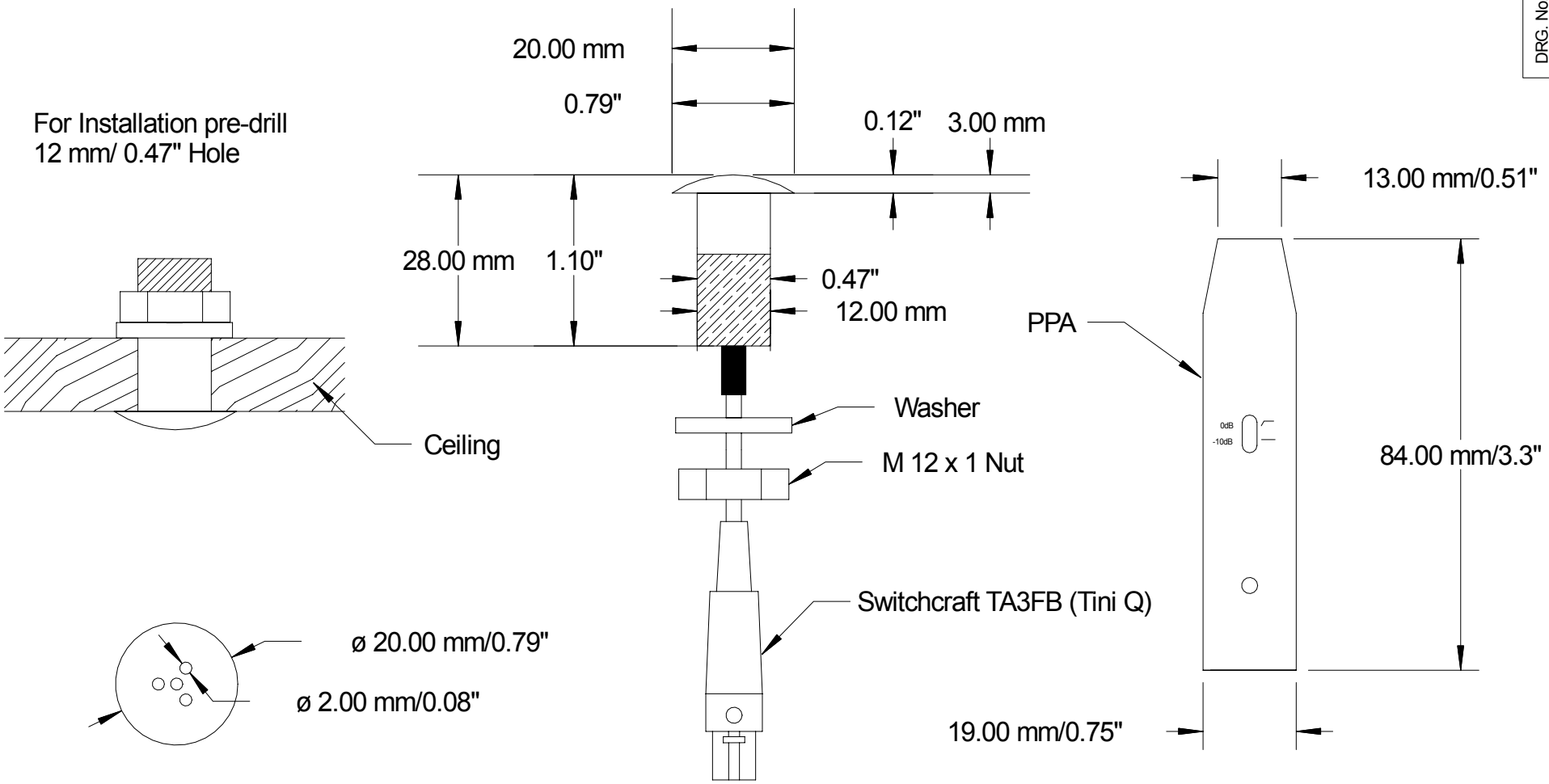

ISSUE	DESCRIPTION	APP'D	DATE		TITLE	DRAWN	TRACED	CHECKED	APPROVED	DATE
	Boundary Layer microphone			CLOCKAUDIO	C 007E	C B				18/01/08
						DRAWING No. 542				